Heating & Cooling | Datasheet

SAMSUNG

AE080RXYDEG

Monobloc Air Source Heat Pump
Gen 6

EUROVENT CERTIFIED PERFORMANCE
www.eurovent-certification.com

Key Features

- Compact Design
- AAA+ rating
- SmartThing[2]
- Solar Integration Enabled[3]

Key Benefits

- Minimal installation space
- Efficient to run
- Actively monitors solar PV generation
- Remote monitoring and control
- Technical support
- Homeowner support

3 years standard warranty included.

- For information about extended warranties contact Energy Lab
  Call: 01271 850 204 or **Email: sales@energylabuk.com**

Heating & Cooling | Datasheet

AE080RXYDEG

Monobloc Air Source Heat Pump **Gen 6**

OUTDOOR UNIT					AE080RXYDEG
System	Operation	Nominal Capacity	Heating A7/W35[1]	W	8.000
			Cooling A35/W18[1]	W	7.500
		Power Input (Nominal)	Heating A7/W35[1]	W	1.770
			Cooling A35/W18[1]	W	1.900
		COP (Nominal Heating) A7/W35[1]		W/W	4,52
		EER (Nominal Cooling) A35/W18[1]		W/W	3,95
		Leaving Water Temperature[2]	Heating	°C	15~65
			Cooling	°C	5~25
		Ambient Temperature	Heating	°C	-25-35
			Cooling	°C	10-46
			DHW	°C	-25-43
	Functions	2-Zone Control[3]		-	•
Outdoor Unit	Power Supply			Φ, V, Hz	1Φ, 220~240V, 50Hz
	Compressor	Type		-	BLDC Twin Rotary
	Base Heater			-	•
	Sound	Sound Pressure[4]	Heating Std	dB(A)	48
			Cooling Std	dB(A)	48
		Sound Power	Heating Std	dB(A)	63
			Cooling Std	dB(A)	64
	Dimensions	Net Weight		kg	76,0
		Net Dimensions (WxHxD)		mm	940 x 998 x 330
	Refrigerant	Type		-	R32
		Contain R32 (GWP=675) which is fluorinated greenhouse gas.			
		Factory Charging		tCO_2e	0,78
				kg	1,15

CAPACITY TABLE							
Water Temperature	Ambient Temperature						
	-10.0	-7.0	-2.0	2.0	7.0	10.0	SCOP
55.0	6.33	5.71	6.03	5.85	8.00	8.15	3.23
50.0	6.83	6.31	6.37	6.18	8.05	8.61	3.53
45.0	7.04	6.91	6.71	6.50	8.10	9.06	3.84
40.0	7.26	7.13	6.94	6.75	8.55	9.47	4.14
35.0	7.49	7.35	7.18	7.00	9.00	9.89	4.44

MCS Certification Number: 007-CU0102(2)

DIMENSIONS

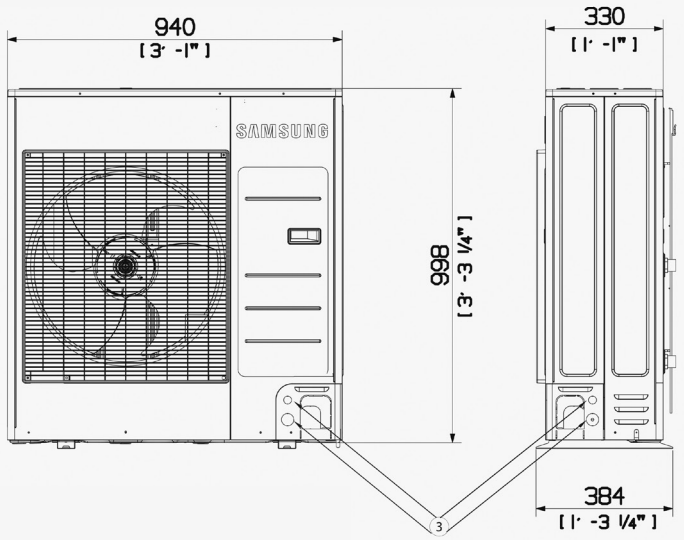

ENERGYLAB
Heat Pumps — Design • Supply • Support

Talk to our sales and distribution partner today.

01271 850 204 • sales@energylabuk.com
energylabuk.com • @the-energy-lab-solutions

Supporting you at every install.

Registered Address: Millennium House, Brannam Crescent, Roundswell Business Park, Barnstaple, Devon, EX31 3TD United Kingdom | Company Number: 08586990